Leica Nova
MS60, TS60 and TM60
Equipment List

PART OF HEXAGON

- when it has to be **right**

Leica Geosystems

Table of Contents

MultiStation and Total Stations 5

1 MultiStation 5
1.1 Models 5
1.2 Angular Accuracies 5

2 Total Stations 6
2.1 Models 6
2.2 Angular Accuracies 6

Additional Options & Accessories 7

3 Additional Options 7
3.1 Second Keyboard 7
3.2 Calibration and Producer Certificates 7
3.3 Camera Calibration 7
3.4 Hardware Options 7

4 Leica Captivate Apps & Software Options 7
4.1 Leica Captivate Software for TS/MS 7
4.2 Apps included in Leica Captivate for TS/MS (827 646) 7
4.3 Optional Apps for Leica Captivate for TS/MS 8
4.4 Local applications for Leica Captivate for TS 9
4.5 Optional Licences for Leica Captivate for TS/MS 9

Accessories 10

5 Power Supply 10
5.1 Internal Batteries 10
5.2 External Batteries 10
5.3 Battery Chargers 10

6 Data Storage and Data Transfer 10
6.1 Memory Devices 10
6.2 Card Reader 10

7 Connectivity 11
7.1 Connector Types 11
7.2 Cables 11

8 Optical Accessories 11
8.1 Eyepiece 11
8.2 Autocollimation Set 11
8.3 Objective 11

9 Instrument Height Meter 12

10 Tribrachs 12

11 Tripods 12

12 Reflector Poles 12
12.1 Standard Poles with stub 12
12.2 Standard Poles with 5/8" screw 13
12.3 Hidden Point Pole 13
12.4 Mini Pole 13

13 Reflector Carriers 13

14 Reflectors 13
14.1 Circular Reflectors 13
14.2 Precision Reflectors 13
14.3 360° Reflectors with stub adapter 14
14.4 360° Reflectors with 5/8" screw adapter 14
14.5 Mini Reflectors 14
14.6 Reflector Tapes 14
14.7 Pen and Screen Protections Foils 14

15 Additional Containers & Accessories for Containers 14

Remote Control 15

16 Remote Control - CS20 Field Controller 15
16.1 CS20 Field Controller 15

16.2 CTR20 TS Communication Expansion Pack 15
17 CS30 Tablet 15
18 CS35 Tablet 16
18.1 CS35 Tablet 16
18.2 CTR35 Long-range Bluetooth Device 16

Accessories for Field Controller 17

19 RadioHandles and TCPS Modem 17
19.1 RadioHandles 17
19.2 TCPS Modem 17
19.3 TCPS Accessories 17
19.4 Cables for TCPS Radio Modem 17
20 AP20 AutoPole 18
20.1 Models 18
20.2 Internal Battery 18
20.3 Reflector poles for AP20 18

SmartPole & SmartStation 19

21 SmartStation & Smartpole Setup using a GS16 GNSS Receiver 19
21.1 GS16 GNSS Receiver 19
21.2 SmartAntenna Adapter 19
22 SmartPole using GS18 GNSS Receiver 20
22.1 GS18 I GNSS Receiver 20
22.2 GS18 T GNSS Receiver 21
22.3 GS18 GNSS Receiver 22

Care Packages 23

23 Customer Care Packages 23

Trademarks & Technical Data 24

24 Trademarks 24
25 Technical Data 24

Suggested Equipment Setups 25

26 Scanning using a MultiStation 25
27 Conventional Surveying 26
27.1 Two Person Surveying using a TS60 Total Station / MS60 MultiStation 26
27.2 Two Person Surveying using a TS60 Total Station / MS60 MultiStation and AP20 27
27.3 Robotic Surveying using a TS60 Total Station/MS60 MultiStation and Field Controller 28
27.4 Robotic Surveying using a TS60 / MS60, AP20 and Field Controller 29
28 SmartPole Surveying 30
28.1 SmartPole using the GS16 GNSS Receiver and Field Controller 30
28.2 SmartPole using TS60 / MS60, GS16, AP20 and Field Controller 31
28.3 SmartPole using the GS18 GNSS Receiver and Field Controller 32
29 SmartStation using the GS16 GNSS Receiver 33
30 Monitoring 34

MultiStation and Total Stations

1 MultiStation

1.1 Models

	MS60
Angle measurement	●
Distance measurement to prism	●
Distance measurement to any surface (R1000)	-
Long Range distance measurement to any surface (R2000)	●
30000 Hz Scanning EDM	●
Horizontal and Vertical Scan	●
AutoHeight	●
Motorised	●
Automatic Target Recognition (ATRplus)	●
Lock mode	●
PowerSearch (PS)	●
Guide Light (EGL)	●
Servofocus	●
Autofocus	●
5 Megapixel imaging	●
Overview Camera	●
Telescope Camera	●
WLAN	●
Bluetooth	●
RS232/USB interface	●
2 GB internal flash memory	●
Hotshoe Interface for RadioHandle	●
LOC8	○
AutoPole AP20 H	○
AutoPole AP20 ID	○
AutoPole AP20 T	○
AutoPole AP20	○
CS20 Field controller connection	○
CS30 Tablet connection	○
CS35 Tablet connection	○
SmartStation GS16 GNSS receiver	○

● Standard
○ Optional
- Not available

1.2 Angular Accuracies

		MS60
1"	**(0.3mgon)**	898 871

MS60 MultiStations are delivered with two 5" WVGA colour touch screens, Quick Guide, documentation USB card (833 146) and upright container GVP727 (817 060).

2 Total Stations

2.1 Models

	TS60 I	TM60	TM60 I
Angle measurement	●	●	●
Distance measurement to prism	●	●	●
Distance measurement to any surface (R1000)	●	●	●
Long Range distance measurement to any surface (R2000)	-	-	-
30000 Hz Scanning EDM	-	-	-
Horizontal and Vertical Scan	-	-	-
Motorised	●	●	●
Automatic Target Recognition (ATRplus)	●	-	-
Long Range Automatic Target Recognition (ATRplus)	-	●	●
Lock mode	●	-	-
PowerSearch (PS)	●	-	-
Guide Light (EGL)	●	-	-
Servofocus	●	●	●
Autofocus	●	-	●
5 Megapixel imaging	●	-	●
Overview Camera	●	-	●
Telescope Camera	●	-	●
WLAN	●	●	●
Bluetooth	●	●	●
RS232/USB interface	●	●	●
2 GB internal flash memory	●	●	●
Hotshoe Interface for RadioHandle	●	●	●
LOC8	○	○	○
AutoPole AP20 H	○	-	-
AutoPole AP20 ID	○	-	-
AutoPole AP20 T	○	-	-
AutoPole AP20	○	-	-
CS20 Field controller connection	○	○	○
CS30 Tablet connection	○	○	○
CS35 Tablet connection	○	○	○
SmartStation GS16 GNSS receiver	○	○	○

● Standard
○ Optional
- Not available

2.2 Angular Accuracies

		TS60 I	TM60	TM60 I
0.5"	**(0.15mgon)**	898 868	822 425	822 427
1"	**(0.3mgon)**	-	822 426	822 428

TS60 Total Stations are delivered with two 5" WVGA colour touch screens, Quick Guide, documentation USB card (833 146) and upright container GVP726 (817 059).

TM60 and TM60 I Total Stations are delivered with one 5" WVGA colour touch screen, Quick Guide, documentation USB card (833 146) and upright container GVP726 (817 059).

Additional Options & Accessories

3 Additional Options

3.1 Second Keyboard

879 378	**GTS49**	2nd keyboard with full VGA colour touch screen, for TM60/TM60 I Total Stations, for telescope position 2, fitted.

3.2 Calibration and Producer Certificates

812 535	Calibration Certificate “Gold”, Angle
812 536	Calibration Certificate “Gold”, A + Dist IR
812 539	Calibration Certificate “Gold”, A + Dist, IR&RL
812 542	Calibration Certificate “Silver”, Angle
812 543	Calibration Certificate “Silver”, A + Dist, IR
812 544	Calibration Certificate “Silver”, A + Dist, IR&R

Calibration Certificate “Blue” (812 541) is always included in initial order (myWorld download).

For Service Calibration Certificates see Standard Service Products (SSPs) document.

3.3 Camera Calibration

793 861	Overview Camera calibration workflow. Article ensures the predelivery logistics for the calibration of the Overview Camera of the Leica Nova TPS. 3rd party fees for instrument calibration and licensing of software are not included.

3.4 Hardware Options

874 451	**GTS46**	LOC8 theft deterrence and location device for automated TS (TM60), fitted.
914 944	**GTS46**	LOC8 theft deterrence and location device for automated TS (TS60/MS60), fitted. The option can be ordered free of charge and is replacing the second face keyboard.

4 Leica Captivate Apps & Software Options

4.1 Leica Captivate Software for TS/MS

827 646	Leica Captivate Measure & Stake for TS/MS.

4.2 Apps included in Leica Captivate for TS/MS (827 646)

	Measure includes: • Measure • Code points • Automatically measure points • Remote Heights • Target Offset calculations

	Setup includes: • Get station coordinates from GNSS, from Job or enter manually • Orientation by known Azimuth • Orientation by known Backsight • Orientation & Height transfer to up to 10 target points • Resection up to 10 target points • Resection Helmert • Orientation to Line • Orientate to Object
	Stake points includes: • Navigate to point using various methods: from and behind instrument, point, base line, arrow, North • Quality control - checking of coordinate differences before storing • Automatically select next closest point • Graphical selection of point from map • Edit heights and offset heights of points • Acoustic beep getting faster when getting closer to point
	COGO includes: • Inverse • Traverse • Intersections • Angle calculations • Line & arc calculations • Bearing & distance calculations • Shift, Rotate, Scale (manual & matching points) • Triangle calculations • Rectangle
	Determine coordinate system: • 1 step, 2 step, 3D Transformation • All common projections
	Alignment Editor: • Horizontal alignments • Vertical alignments • Cross sections • Chainage equations • Create points and lines
	Data import: ASCII, XML, DXF, DTM, alignments
	Data export: ASCII, Custom, DXF, XML, Style Sheets, FBK, RW5, RAW and local formats

4.3 Optional Apps for Leica Captivate for TS/MS

☞ The following apps require a valid license key.

834 221	**Athletics**
827 650	**Area Division**
827 651	**Stake DTM**
827 648	**Measure and Stake to Line**
827 649	**Measure to Plane / Grid**
827 653	**Check and Stake Road**
827 654	**Check and Stake Tunnel**
827 655	**Check and Stake Rail**
827 658	**Sets of Angles**
827 652	**Volume Calculation**
827 656	**Hidden Point**
827 657	**Traverse**
827 659	**QuickVolume**

4.4 Local applications for Leica Captivate for TS

834 218	**Offset+**
834 224	**Zenith Line**
834 227	**Quick Setup**
834 229	**Auto Setup**
834 230	**Remote Monitoring**
834 255	**Piling**
836 522	**Machine Control Guidance**
839 678	**Inspect Surfaces**
836 669	**Tunnel Profile Generator**
846 826	**TPS Survey Streaming**
850 622	**ESRI Shapefile Exporter**
834 226	**Set Orientation**
847 944	**Inspect Road** ☞ Requires 839 678 Inspect Surfaces.
847 945	**Inspect Tunnel** ☞ Requires 839 678 Inspect Surfaces.
847 952	**Inventory (Mtl)**
865 657	**Compaction Control**
867 331	**Stakeout Auto Points**
869 755	**Structural Steel**

4.5 Optional Licences for Leica Captivate for TS/MS

827 662	**Leica Exchange**
903 372	**ConX 1y**
903 373	**ConX 2y**
903 374	**ConX 3y**
923 922	**BricSys 24/7 1y**
923 925	**BricSys 24/7 2y**
923 928	**BricSys 24/7 3y**

Accessories

5 Power Supply

5.1 Internal Batteries

793 975	**GEB242**	Lithium-Ion battery, 14.8V/5.8Ah, rechargeable, for Leica Nova TPS.

5.2 External Batteries

905 305	**GEB373**	External universal battery, Li Ion, 13V, 289 Wh, rechargeable.
807 696	**GEV270**	Power supply unit for TPS/GNSS/DNA. For indoor use only. Input 100-240VAC to output 13.2VDC, with connection for power cables. ☞ Requires a GEV219, GEV220 or GEV261 cable for Nova instruments.

5.3 Battery Chargers

799 185	**GKL311**	Single-bay Charger Professional 3000. Charger for one Li-Ion battery (GEB211, GEB212, GEB221, GEB222, GEB241, GEB242, GEB321, GEB331 and GEB361), including AC/DC adaptor and cigarette lighter cable.
799 187	**GKL341**	Multi-bay Charger Professional 5000. Charges up to 4 batteries (GEB211, GEB212, GEB221, GEB222, GEB241, GEB242, GEB321, GEB331 and GEB361), including power cable
734 389	**GDC221**	Car adapter for the GKL341 charger. Allows the use of the GKL341 with a cigarette lighter; 12V/24V DC/DC converter. Can also be used to power CS15 field controller directly from a cigarette lighter.
774 437	**GEV242**	Charger for GEB371 / GEB373 external battery.

6 Data Storage and Data Transfer

6.1 Memory Devices

767 856	**MSD1000**	SD memory card 1GB for Leica Viva TPS and Leica Nova instruments and CS20 field controller, industrial grade.
789 139	**MSD08**	SD memory card 8GB for Leica Viva TPS and Leica Nova instruments and CS20 field controller, industrial grade.
765 199	**MS1**	USB memory stick, 1GB, for Leica Viva TPS and Leica Nova instruments and CS20 field controller, industrial grade.

6.2 Card Reader

767 895	**MCR7**	Card reader for SD/CF cards.

7 Connectivity

7.1 Connector Types

Name	Used on	
Lemo1 5-pin	Battery / External power	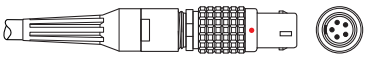
Lemo1 8-pin	Leica Nova TPS / Leica Viva field controllers	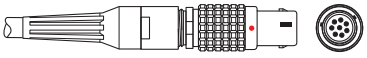
Lemo1 8-pin	External TS radios	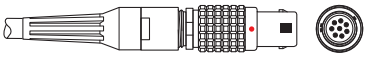
USB A	PC / Laptop	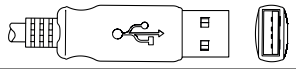
9-pin RS232 serial	PC / Laptop	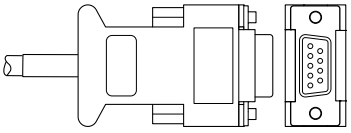

7.2 Cables

439 038	**GEV71**	Car battery cable, connects 12V car battery connector to Lemo1 5-pin female.
733 282	**GEV162**	Serial data cable for communication to PC, connects Lemo1 8-pin to 9-pin RS232 serial.
733 283	**GEV163**	Serial data cable for communication between TS and CS, connects Lemo1 8-pin to Lemo1 8-pin.
758 469	**GEV219**	Power cable between TS and battery, Lemo1 5-pin to Lemo1 8-pin.
759 257	**GEV220**	Serial data Y-cable, connects Lemo1 8-pin connector to PC (9-pin RS232 serial) and external battery (Lemo1 5pin), 2m.
767 899	**GEV234**	USB data cable for communication to PC, Lemo1 8-pin to USB A connector.
771 057	**GEV236**	Serial data Y-cable for TS robotic setup, Lemo1 5-pin (battery) to Lemo1 8-pin (instrument) and Lemo1 8-pin (external TS radio).
772 807	**GEV237**	USB data cable for communication between TS and CS, Lemo1 8-pin to USB connector, Lemo1 8-pin (TS) to Lemo1 8-pin (CS).
793 364	**GEV261**	USB data X-cable for communication to PC, connects Lemo1 8-pin to PC USB A connector (USB data) and PC 9-pin RS232 connector (serial data) and external battery (Lemo1 5-pin).
806 095	**GEV269**	Serial data transfer cable, converter cable USB A to Lemo1 8-pin, connects TS to PC, PC driver included on CD.

8 Optical Accessories

8.1 Eyepiece

377 802	**FOK53**	Magnification eyepiece, additional eyepiece for increasing telescope magnification to 42x. ☞ Modification in a workshop necessary.
793 979	**GFZ3**	Diagonal eyepiece for telescope with bayonet connection.
376 236	**GOK6**	Eyepiece for steep sights, with joint allowing variable sighting angle.

8.2 Autocollimation Set

199 899	**GOA2**	Autocollimation eyepiece.
394 787	**GEB62**	Plug-in lamp, with cable for autocollimation eyepiece.
394 792	**GEB63**	Battery box for autocollimation eyepiece and eyepiece lamp.

8.3 Objective

743 504	**GVO13**	Objective solar filter for TPS instruments.

9 Instrument Height Meter

667 718	**GHM007**	Instrument height meter.
722 045	**GHT196**	Distance holder for height meter.
60100179		Height Meter set including GHM007 Instrument height meter and GHT196 Distance holder for height meter.

10 Tribrachs

777 508	**GDF321**	Tribrachs Series 5000, without optical plummet.
777 509	**GDF322**	Tribrachs Series 5000, with optical plummet.
842 061	**GDF311**	Tribrachs Series 3000, without optical plummet.
842 062	**GDF312**	Tribrachs Series 3000, with optical plummet.

11 Tripods

296 632	**GST20**	Heavy duty tripod, with side clamp screws, carrying strap and plumb bob.
394 752	**GST20-9**	Heavy duty tripod, with side clamp screws and carrying strap.
667 301	**GST120-9**	Heavy duty tripod, self-closing, with side clamp screws and carrying strap.
332 200	**GST4**	Tripod-star, for setting up tripods on hard and slippery surfaces.

12 Reflector Poles

12.1 Standard Poles with stub

754 391	**GLS12**	Reflector pole, telescopic to 2.00m with circular bubble, cm graduations.
754 389	**GLS12F**	Reflector pole, telescopic to 2.00m with circular bubble, ft graduations.
766 359	**GLS31**	Reflector carbon-fibre pole with circular bubble and twist lock. Snap-locks at 2.00m, 1.80m and 1.50m for GNSS antennas with GAD31 adapter or GRZ122 reflector (SmartPole setup).
913 901	**GLS51**	Telescopic carbon-fibre pole with stub interface, supports AP20 AutoPole product. With circular bubble, twist lock and dedicated snap-lock positions. Minimum length 1.34m, extendable to target height 2.20m, printed scale on extendable and lower tube, graduation in cm.
913 902	**GLS51F**	Telescopic carbon-fibre pole with stub interface, supports AP20 AutoPole product. With circular bubble, twist lock and dedicated snap-lock positions. Minimum length 4.5 ft, extendable to target height 7.0 ft, printed scale on extendable and lower tube, graduation in ft.
385 500	**GLS11**	Reflector pole, telescopic, with circular bubble, cm and ft graduation, extends to 2.15m.
667 309	**GLS111**	Reflector pole, with bull's-eye bubble, cm/ft graduation, extends to 2.60m, with red/white 0.20m graduations.
667 310	**GLS112**	Reflector pole, with bull's-eye bubble, cm/ft graduation, extends to 3.65m, with red/white 0.20m graduations.
555 720	**GSR2**	Dual-strut support for GLS11 plumbing pole.
667 319	**GSR111**	Dual-strut support for all GLS.
403 428	**GZW12**	Extension 1m long, for reflector pole GLS11 and carriers.

12.2 Standard Poles with 5/8" screw

913 899	**CRP4**	Telescopic carbon-fibre pole with 5/8" screw thread interface, supports AP20 AutoPole product. With upright circular bubble and upside-down circular bubble, twist lock and dedicated snap-lock positions. Minimum length 1.37m, extendable to target height 2.20m, printed scale both on extendable tube and lower tube, graduation in cm.
913 900	**CRP5**	Telescopic carbon-fibre pole with 5/8" screw thread interface, supports AP20 AutoPole product. With upright circular bubble and upside-down circular bubble, twist lock and dedicated snap-lock positions. Minimum length 4.55 ft, extendable to target height 7.0 ft, printed scale both on extendable tube and lower tube, graduation in ft.
☞ CRP4 and CRP5 only support MPR122 360° reflector with 5/8" screw adapter.		

12.3 Hidden Point Pole

742 329	**GMP112**	Hidden Point pole extension for GMP111 (mini prism pole set). Includes mini prism with holder and 30cm adapter pole. ☞ Additional GMP111 Mini prim (641 615) required for complete Hidden Point pole set with two prisms.

12.4 Mini Pole

403 427	**GLS14**	Mini reflector pole, (prism/target 20cm over point), with circular bubble.

13 Reflector Carriers

667 313	**GRT144**	Carrier with stub.
667 316	**SNLL121**	Precision carrier, with longitudinal bubble and zenith-nadir laser plummet.
428 340	**GZR3**	Precision carrier, with longitudinal bubble and optical plummet.
725 566	**GZR103**	Carrier, with longitudinal bubble and optical plummet, for reflectors and GPS antenna.
667 217	**GAD31**	Screw-to-stub adapter for fitting GPS antenna on carriers with stub and poles with stub.

14 Reflectors

14.1 Circular Reflectors

641 617	**GPR121**	Circular prism, with metal holder and target plate.
362 830	**GPR1**	Circular prism, in black housing.
362 820	**GPH1**	Single-prism holder.
362 823	**GZT4**	Target plate, for GPH1.

14.2 Precision Reflectors

555 631	**GPH1P**	Single-prism precision reflector.

14.3 360° Reflectors with stub adapter

754 384	**GRZ122**	360° reflector with 5/8" thread adapter for mounting of GPS antenna.
639 985	**GRZ4**	360° reflector.
644 327	**GRZ101**	360° mini prism with 1/4" thread fitting. Not supported by PowerSearch.
742 006	**GAD103**	Adapter for attaching GRZ101 to all poles with Leica Geosystems stub.

14.4 360° Reflectors with 5/8" screw adapter

756 637	**MPR122**	360° reflector with 5/8" thread adapter for mounting of GNSS antenna and 5/8" screw nut.

14.5 Mini Reflectors

641 662	**GMP101**	Mini prism, incl. bubble, target plate and spike, in bag, also suitable for GLS11/GLS12 and GRT144 (same height as GPH1, additive constant +17.5mm).
641 762	**GMP104**	Mini prism, with L-bar, for fixed installations.

14.6 Reflector Tapes

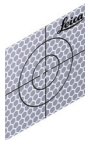

763 532	**GZM29**	Reflective tape, 20x20mm for short range, pack of 20 pieces.
763 533	**GZM30**	Reflective tape, 40x40mm for medium range, pack of 20 pieces.
763 534	**GZM31**	Reflective tape, 60x60mm for long range, pack of 20 pieces.

14.7 Pen and Screen Protections Foils

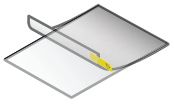

Extra pen		
813 914	**GDZ71**	Pen with tether clip interface for CS20 field controller and TS16/MS60/TS60 instruments.
Screen Protection Foil set		
813 781	**SPF05**	5" WVGA screen protection foils for CS20 field controller and TS16/MS60/TS60 instruments.

15 Additional Containers & Accessories for Containers

727 589	**GVP102**	Soft bag with shoulder strap, for prism station, consist of tribrach, prism carrier or laser plummet and prism.
833 516	**GVP716**	Backpack carrying systems for all large TPS and GNSS containers.
833 517	**GVP717**	Sidebag for container GVP721/722/723/725/728/729/735.
833 518	**GVP718**	Basic backstrap for container GVP721/722/723/725/728/729/735.
833 519	**GVP719**	Shoulderstrap for container GVP721/722/723/725/728/729/735.
914 930	**GVP738**	Hard container for 2 prisms, 2 carriers/laser plummets, 2 tribrachs, CS10, CS15, CS20, CS30, CS35 and AP20. All CS fits with attached holder.
937 437	**GVP740**	Hard container for SmartAntenna, CS Field Controller and accessories for a SmartPole and SmartStation setup.
937 438	**GVP741**	Small-sized hard container for 360° prism and controller for TS Robotic Pole setup.
961 156	**GVP747**	Hard container, for CS20, CS30 and CS35 field controller including attached holders, 360° prisms and AP20.

Remote Control

16 Remote Control - CS20 Field Controller

16.1 CS20 Field Controller

876 476	**CS20 Basic Field Controller**	**CS20 Field Controller.** Ruggedized field controller with 5" WVGA touch display, 4GB eMMC Flash Memory, 2GB SDRAM, SD card slot, 5MP camera and LED flash. Includes internal Bluetooth/WLAN module, QWERTY keypad, stylus.
876 477	**CS20 LTE Field Controller**	**CS20 LTE Field Controller.** Ruggedized field controller with 5" WVGA touch display, 4GB eMMC Flash Memory, 2GB SDRAM, SD card slot, 5MP camera and LED flash. Includes internal Bluetooth/WLAN module, 4G GSM/UMTS/LTE module, internal TS communication module, QWERTY keypad, stylus.
876 478	**CS20 LTE Disto Field Controller**	**CS20 LTE Disto Field Controller.** Ruggedized field controller with 5" WVGA touch display, 4GB eMMC Flash Memory, 2GB SDRAM, SD card slot, 5MP camera and LED flash. Includes internal Bluetooth/WLAN module, 4G GSM/UMTS/LTE module, internal TS communication module, integrated Disto-Lasermeter QWERTY keypad, stylus.
876 479	**CS20 LTE Field Controller (US, CA)**	**CS20 LTE Field Controller US/CA.** Ruggedized field controller with 5" WVGA touch display, 4GB eMMC Flash Memory, 2GB SDRAM, SD card slot, 5MP camera and LED flash. Includes internal Bluetooth/WLAN module, 4G GSM/UMTS/LTE module, internal TS communication module, QWERTY keypad, stylus.
876 480	**CS20 LTE Disto Field Controller (US, CA)**	**CS20 LTE Disto Field Controller US/CA.** Ruggedized field controller with 5" WVGA touch display, 4GB eMMC Flash Memory, 2GB SDRAM, SD card slot, 5MP camera and LED flash. Includes internal Bluetooth/WLAN module, 4G GSM/UMTS/LTE module, internal TS communication module, integrated Disto-Lasermeter QWERTY keypad, stylus.

16.2 CTR20 TS Communication Expansion Pack

☞ Not available in EU countries due to EN 300 328 V.1.8.1.

☞ Recommended only for robotic applications systematically exceeding ranges beyond 400 m.

6010023		**CTR20 expansion pack set** TS communication expansion pack set including CTR20 module and GAT25 radio antenna.
808 038	**CTR20**	**CTR20 TS communication expansion pack** CTR20 TS communication expansion pack with integrated radio module for CS20 3.75G field controller variants. Used to establish long range radio connection between CS20 3.75G field controller and TS Total Stations equipped with RH16. GAT25 radio antenna not included (frequency range 2402 - 2480 MHz). ☞ Requires a GAT25 radio antenna.
812 027	**GAT25**	**GAT25 radio antenna for CTR20 module** Radio antenna for CTR20 long range TS communication module (frequency range 2402 - 2480 MHz).

17 CS30 Tablet

925 660	**CS30 LTE**	**CS30 LTE Tablet** Ruggedized Win10 LTSC 64-bit Tablet Computer including: 7" touch-widescreen, 64 GB eMMC hard drive, 4 GB RAM, WLAN 802.11 b/g/n/a/ac, 3G/4G Integrated Mobile Broadband module, Bluetooth v4.2, 8MP rear camera with flash, 1x GEV228 Power Supply unit, 1x GDZ80 Capacitive Stylus. Captivate pre-loaded.

18 CS35 Tablet

18.1 CS35 Tablet

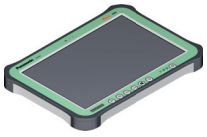

875 363	**CS35-1**	**CS35-1 10" Tablet, EU, RU** Ruggedized Win10 64-bit Tablet Computer including: 10" touch-widescreen, 256 GB SSD hard drive, 8 GB SDRAM, WLAN 802.11 b/g/n/a/ac, 4G Integrated Mobile Broadband module, Bluetooth v4.1, Stylus, 1x Battery (4.1Ah), AC/DC adaptor and 8MP rear camera with flash.
875 364	**CS35-2**	**CS35-2 10" Tablet, US, CA** Ruggedized Win10 64-bit Tablet Computer including: 10" touch-widescreen, 256 GB SSD hard drive, 8 GB SDRAM, WLAN 802.11 b/g/n/a/ac, 4G Integrated Mobile Broadband module, Bluetooth v4.1, Stylus, 1x Battery (4.1Ah), AC/DC adaptor and 8MP rear camera with flash.
875 365	**CS35-3**	**CS35-3 Tablet, AUS NZ** Ruggedized Win10 64-bit Tablet Computer including: 10" touch-widescreen, 256 GB SSD hard drive, 8 GB SDRAM, WLAN 802.11 b/g/n/a/ac, 4G Integrated Mobile Broadband module, Bluetooth v4.1, Stylus, 1x Battery (4.1Ah), AC/DC adaptor and 8MP rear camera with flash.

All CS35 Tablets are delivered with stylus, tether, one GEB235 Lithium-Ion battery (11.1 V/4.1 Ah, rechargeable) and country specific AC/DC adaptor.

18.2 CTR35 Long-range Bluetooth Device

844 474	**CTR35**	Long-range Bluetooth device for CS35.

Recommended only for robotic applications requiring extended range.

Please refer to the Leica Captivate Controller Equipment list for CS20 / CS30 and CS35 related options and accessories.

Accessories for Field Controller

19 RadioHandles and TCPS Modem

19.1 RadioHandles

818 467	**RH17**	RadioHandle with integrated long range Bluetooth module and radio antenna. Used as radio modem for Leica Viva TPS and Leica Nova instruments. Establishes communication to CS20/CS35 or CS15 field controller equipped with CTR16/17 or external radio modem TCPS29/30 attached to PC. Frequency range 2402 - 2480 MHz. ☞ Fulfills EN 300 328 V.1.8.1.

922 840	**RH18**	RadioHandle with two integrated Bluetooth modules and radio antenna. Supports Bluetooth low energy for AP20 AutoPole with Tilt Compensation. Used as radio modem for Leica total stations running Leica Captivate field software. Establishes communication to field controller CS20/30/35 or with/without CTR20/30/35 Bluetooth stick or external radio modem TCPS29/TCPS30. Frequency range 2402 - 2480 MHz. ☞ fulfils EN 300 328 V.1.8.1.

19.2 TCPS Modem

818 469	**TCPS30**	Bluetooth radio modem with antenna. Used as external radio modem for Leica Viva TPS and Leica Nova instruments or PCs. Frequency range 2402 - 2480 MHz. ☞ Fulfills EN 300 328 V.1.8.1.

19.3 TCPS Accessories

734 163	**GHT43**	Adapter for mounting TCPS radio module on GST20/GST120 tripod.

19.4 Cables for TCPS Radio Modem

☞ For an overview of the different connector types, refer to chapter 7.1.

734 697	**GEV186**	Serial data Y-cable for TS Robotic setup, Lemo1 5-pin (battery) to Lemo0 5-pin (instrument) and Lemo1 8-pin (external TCPS radio).
707 525	**GK1**	Lemo Converter 30° for PC (9-pin RS232 serial). ☞ Use GK1 in combination with GEV186 to connect TCPS with PC for configuration or communication.
771 057	**GEV236**	Y-cable Lemo1 8-pin (CS20 Field Controller) to Lemo1 5-pin (battery) and Lemo1 8-pin (external TCPS radio), 1.8 m.

20 AP20 AutoPole

20.1 Models

922 835	**AP20 H**	AutoPole AP20 H with Target Height module ensures to automatically detect and apply target height to paired field SW.
922 836	**AP20 ID**	AutoPole AP20 ID with Target ID module ensures to find and measure your target, wirelessly connected to your automated total station.
922 837	**AP20 T**	AutoPole AP20 T with Target Height and Tilt Compensation module ensures to automatically detect and apply target height and to compensate a tilted pole alignment, wirelessly connected to your automated total station.
922 838	**AP20**	AutoPole AP20 with Target Height, Target ID and Tilt compensation module ensures to detect and apply target height, to find and measure your target and to compensate a tilted pole alignment, wirelessly connected to your automated total station.

AP20 AutoPole can only be attached to GLS51 / GLS51F / CRP4 / CRP5 Reflector Poles

AP20 T and AP20 require 922 840 RH18 on total station side to support Tilt Compensation.

20.2 Internal Battery

898 414	**GEB321**	Lithium-Ion battery, 7.2V/3.35Ah, rechargeable. To be used with AP20 AutoPole.

20.3 Reflector poles for AP20

913 901	**GLS51**	Telescopic carbon-fibre pole with stub interface, supports AP20 AutoPole product. With circular bubble, twist lock and dedicated snap-lock positions. Minimum length 1.34m, extendable to target height 2.20m, printed scale on extendable and lower tube, graduation in cm.
913 902	**GLS51F**	Telescopic carbon-fibre pole with stub interface, supports AP20 AutoPole product. With circular bubble, twist lock and dedicated snap-lock positions. Minimum length 4.5 ft, extendable to target height 7 ft 0 inch, printed scale on extendable and lower tube, graduation in ft.
913 899	**CRP4**	Telescopic carbon-fibre pole with 5/8" screw thread interface, supports AP20 AutoPole product. With upright circular bubble and upside-down circular bubble, twist lock and dedicated snap-lock positions. Minimum length 1.37m, extendable to target height 2.20m, printed scale both on extendable tube and lower tube, graduation in cm.
913 900	**CRP5**	Telescopic carbon-fibre pole with 5/8" screw thread interface, supports AP20 AutoPole product. With upright circular bubble and upside-down circular bubble, twist lock and dedicated snap-lock positions. Minimum length 4.55 ft, extendable to target height 7.0 ft, printed scale both on extendable tube and lower tube, graduation in ft.

SmartPole & SmartStation

21 SmartStation & Smartpole Setup using a GS16 GNSS Receiver

21.1 GS16 GNSS Receiver

851 142	**GS16**	**Leica GS16 Basic SmartAntenna EG ***
947 069	**GS16**	**Leica GS16 Basic SmartAntenna ***
939 764	**GS16**	**Leica GS16 UHF Basic SmartAntenna ***
939 763	**GS16**	**Leica GS16 UHF Regional SmartAntenna ***
939 767	**GS16**	**Leica GS16 UHF Performance SmartAntenna**
939 768	**GS16**	**Leica GS16 UHF Unlimited SmartAntenna**

* Available in selected countries only.

	Leica GS16 Basic *	Leica GS16 Regional *	Leica GS16 Performance	Leica GS16 Unlimited
Supported GNSS Systems				
Multi-frequency (L1, L2, L5, L-band)	●	●	●	●
GLONASS	○	○	○	●
Galileo	○	○	○	●
BeiDou	○	○	○	●
QZSS	○	○	○	●
RTK performance				
DGPS	●	●	●	●
RTK unlimited	○	●	●	●
Network RTK	○	●	●	●
SmartLink fill	○	○	○	●
SmartLink	○	○	○	○
Interference mitigation	○	○	○	○
Position update & data recording				
20 Hz positioning	●	●	●	●
Raw data logging	●	●	●	●
RINEX logging	○	○	○	●
NMEA out	○	○	○	●
Additional features				
RTK Reference Station functionality	○	●	●	●
No country limitation	●	○	●	●

● Standard
○ Optional

21.2 SmartAntenna Adapter

767 802	**GAD110**	SmartAntenna adapter to mount GS16 SmartAntenna. ☞ BT module to connect the TS to the GS16 GNSS receiver is standard on all Leica Viva TPS and Leica Nova instruments.

☞ Please refer to the Leica Captivate GNSS Equipment list for GS16 related options and accessories.

22 SmartPole using GS18 GNSS Receiver

22.1 GS18 I GNSS Receiver

949 985	**GS18**	**Leica GS18 I LTE Basic SmartAntenna ***
864 380	**GS18**	**Leica GS18 I LTE Performance SmartAntenna**
864 381	**GS18**	**Leica GS18 I LTE Unlimited SmartAntenna**
949 986	**GS18**	**Leica GS18 I LTE & UHF Basic SmartAntenna ***
864 383	**GS18**	**Leica GS18 I LTE & UHF Performance SmartAntenna**
864 384	**GS18**	**Leica GS18 I LTE & UHF Performance SmartAntenna (NAFTA)**
879 671	**GS18**	**Leica GS18 I LTE & UHF Performance SmartAntenna (JP)**
864 385	**GS18**	**Leica GS18 I LTE & UHF900 Performance SmartAntenna ***
864 386	**GS18**	**Leica GS18 I LTE & UHF Unlimited SmartAntenna**

* Available in selected countries only.

	Leica GS18 I Basic *	**Leica GS18 I Performance**	**Leica GS18 I Unlimited**
Supported GNSS Systems			
Multi-frequency (L1, L2, L5, L-band)	●	●	●
GLONASS	○	○	●
Galileo	○	○	●
BeiDou	○	○	●
QZSS	○	○	●
RTK performance			
DGPS	●	●	●
RTK unlimited	○	●	●
Network RTK	○	●	●
SmartLink fill	○	○	●
SmartLink	○	○	○
Interference mitigation	○	○	○
Position update & data recording			
20 Hz positioning	●	●	●
Raw data logging	●	●	●
RINEX logging	○	○	●
NMEA out	○	○	●
Additional features			
Tilt compensation	●	●	●
Image point measurement	●	●	●
RTK Reference Station functionality	○	●	●

● Standard
○ Optional

22.2 GS18 T GNSS Receiver

949 983	**GS18**	**Leica GS18 T LTE Basic SmartAntenna ***
899 218	**GS18**	**Leica GS18 T LTE Regional SmartAntenna ***
855 300	**GS18**	**Leica GS18 T LTE Performance SmartAntenna**
855 301	**GS18**	**Leica GS18 T LTE Unlimited SmartAntenna**
949 984	**GS18**	**Leica GS18 T LTE & UHF Basic SmartAntenna ***
899 220	**GS18**	**Leica GS18 T LTE & UHF Regional SmartAntenna ***
855 303	**GS18**	**Leica GS18 T LTE & UHF Performance SmartAntenna**
855 304	**GS18**	**Leica GS18 T LTE & UHF Performance SmartAntenna (NAFTA)**
865 980	**GS18**	**Leica GS18 T LTE & UHF Performance SmartAntenna (JP)**
945 113	**GS18**	**Leica GS18 T LTE & UHF900 Performance SmartAntenna ***
855 305	**GS18**	**Leica GS18 T LTE & UHF Unlimited SmartAntenna**

* Available in selected countries only.

	Leica GS18 T Basic *	**Leica GS18 T Regional ***	**Leica GS18 T Performance**	**Leica GS18 T Unlimited**
Supported GNSS Systems				
Multi-frequency (L1, L2, L5, L-band)	●	●	●	●
GLONASS	○	○	○	●
Galileo	○	○	○	●
BeiDou	○	○	○	●
QZSS	○	○	○	●
RTK performance				
DGPS	●	●	●	●
RTK unlimited	○	●	●	●
Network RTK	○	●	●	●
SmartLink fill	○	○	○	●
SmartLink	○	○	○	○
Interference mitigation	○	○	○	○
Position update & data recording				
20 Hz positioning	●	●	●	●
Raw data logging	●	●	●	●
RINEX logging	○	○	○	●
NMEA out	○	○	○	●
Additional features				
Tilt compensation	●	●	●	●
RTK Reference Station functionality	○	●	●	●
No country limitation	●	○	●	●

● Standard
○ Optional

22.3 GS18 GNSS Receiver

939 670	**GS18**	**Leica GS18 LTE Basic SmartAntenna ***
939 669	**GS18**	**Leica GS18 LTE Regional SmartAntenna ***
939 671	**GS18**	**Leica GS18 LTE Performance SmartAntenna**
939 672	**GS18**	**Leica GS18 LTE Unlimited SmartAntenna**
939 674	**GS18**	**Leica GS18 LTE & UHF Basic SmartAntenna ***
939 673	**GS18**	**Leica GS18 LTE & UHF Regional SmartAntenna ***
939 675	**GS18**	**Leica GS18 LTE & UHF Performance SmartAntenna**
939 677	**GS18**	**Leica GS18 LTE & UHF Performance SmartAntenna (NAFTA)**
939 679	**GS18**	**Leica GS18 LTE & UHF Performance SmartAntenna (JP)**
939 678	**GS18**	**Leica GS18 LTE & UHF900 Performance SmartAntenna ***
939 676	**GS18**	**Leica GS18 LTE & UHF Unlimited SmartAntenna**

* Available in selected countries only.

	Leica GS18 Basic *	**Leica GS18 Regional ***	**Leica GS18 Performance**	**Leica GS18 Unlimited**
Supported GNSS Systems				
Multi-frequency (L1, L2, L5, L-band)	●	●	●	●
GLONASS	○	○	○	●
Galileo	○	○	○	●
BeiDou	○	○	○	●
QZSS	○	○	○	●
RTK performance				
DGPS	●	●	●	●
RTK unlimited	○	●	●	●
Network RTK	○	●	●	●
SmartLink fill	○	○	○	●
SmartLink	○	○	○	○
Interference mitigation	○	○	○	○
Position update & data recording				
20 Hz positioning	●	●	●	●
Raw data logging	●	●	●	●
RINEX logging	○	○	○	●
NMEA out	○	○	○	●
Additional features				
RTK Reference Station functionality	○	●	●	●
No country limitation	●	○	●	●

● Standard
○ Optional

Please refer to the Leica Captivate GNSS Equipment list for GS18 related options and accessories

Care Packages

23 Customer Care Packages

	A wide selection of comprehensive Customer Care Packages (CCPs) is available bundling Hardware Maintenance, Software Maintenance, Customer Support and Extended Warranty. For more information about the CCP offering in your country please contact your local Leica Geosystems organization or distribution partner.

Trademarks & Technical Data

24 Trademarks

The *Bluetooth*® word mark and logos are owned by Bluetooth SIG, Inc. and any use of such marks by Leica Geosystems AG is under license.
SD and microSD are trademarks of the SD-3C, LLC.
Other trademarks and trade names are those of their respective owners.

25 Technical Data

Laser plummet:
Laser class 2 in accordance with IEC 60825-1 resp. EN 60825-1

Guide light (EGL):
LED class 1 in accordance with IEC 60825-1 resp. EN 60825-1

Distance meter (Prism, ATRplus and PowerSearch):
Laser class 1 in accordance with IEC 60825-1 resp. EN 60825-1

Distance meter (Non-Prism):
Laser class 3R in accordance with IEC 60825-1 resp. EN 60825-1

Suggested Equipment Setups

26 Scanning using a MultiStation

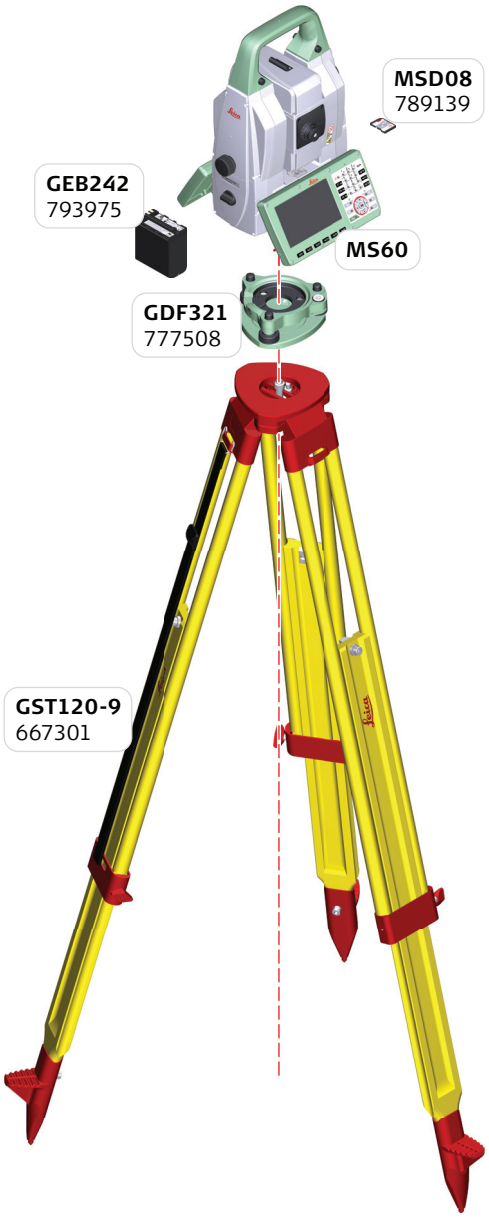

27 Conventional Surveying

27.1 Two Person Surveying using a TS60 Total Station / MS60 MultiStation

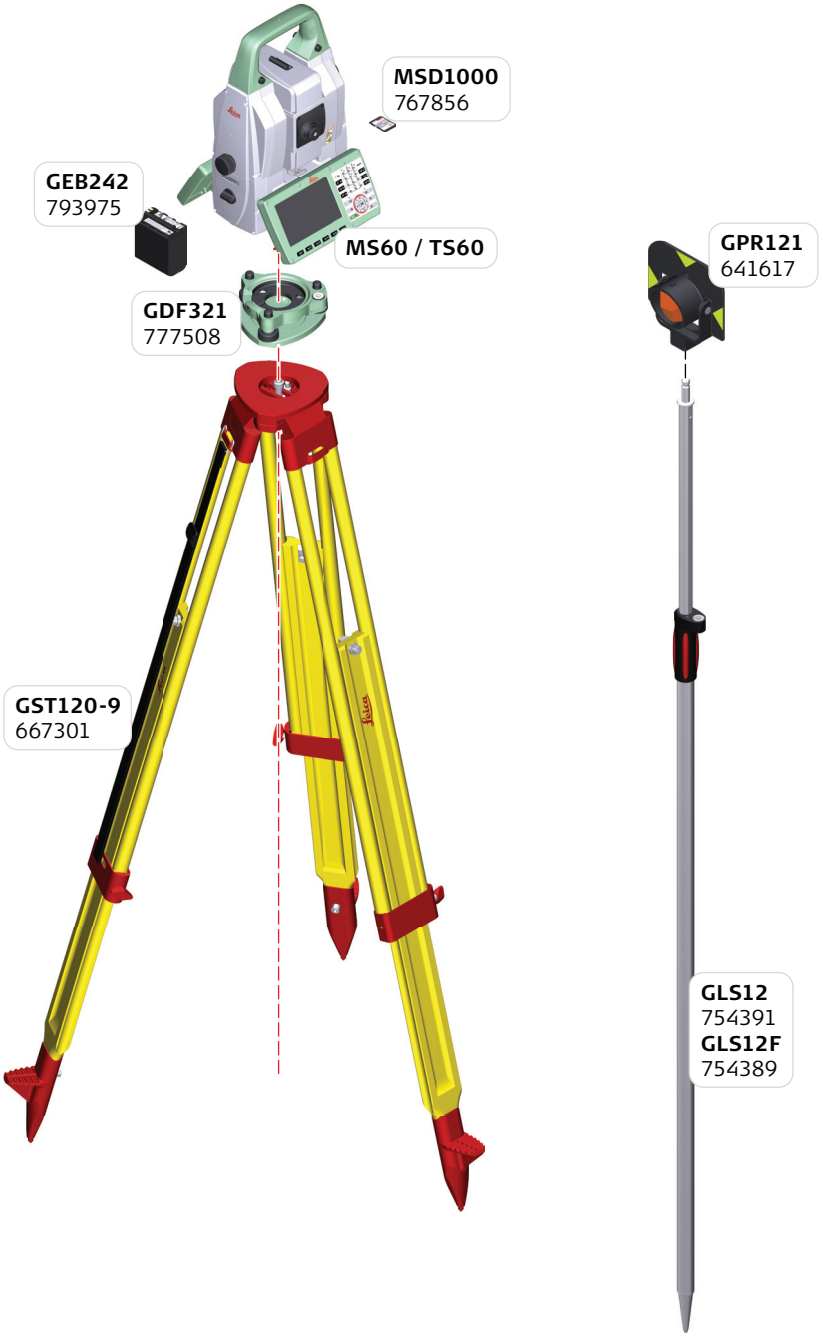

27.2 Two Person Surveying using a TS60 Total Station / MS60 MultiStation and AP20

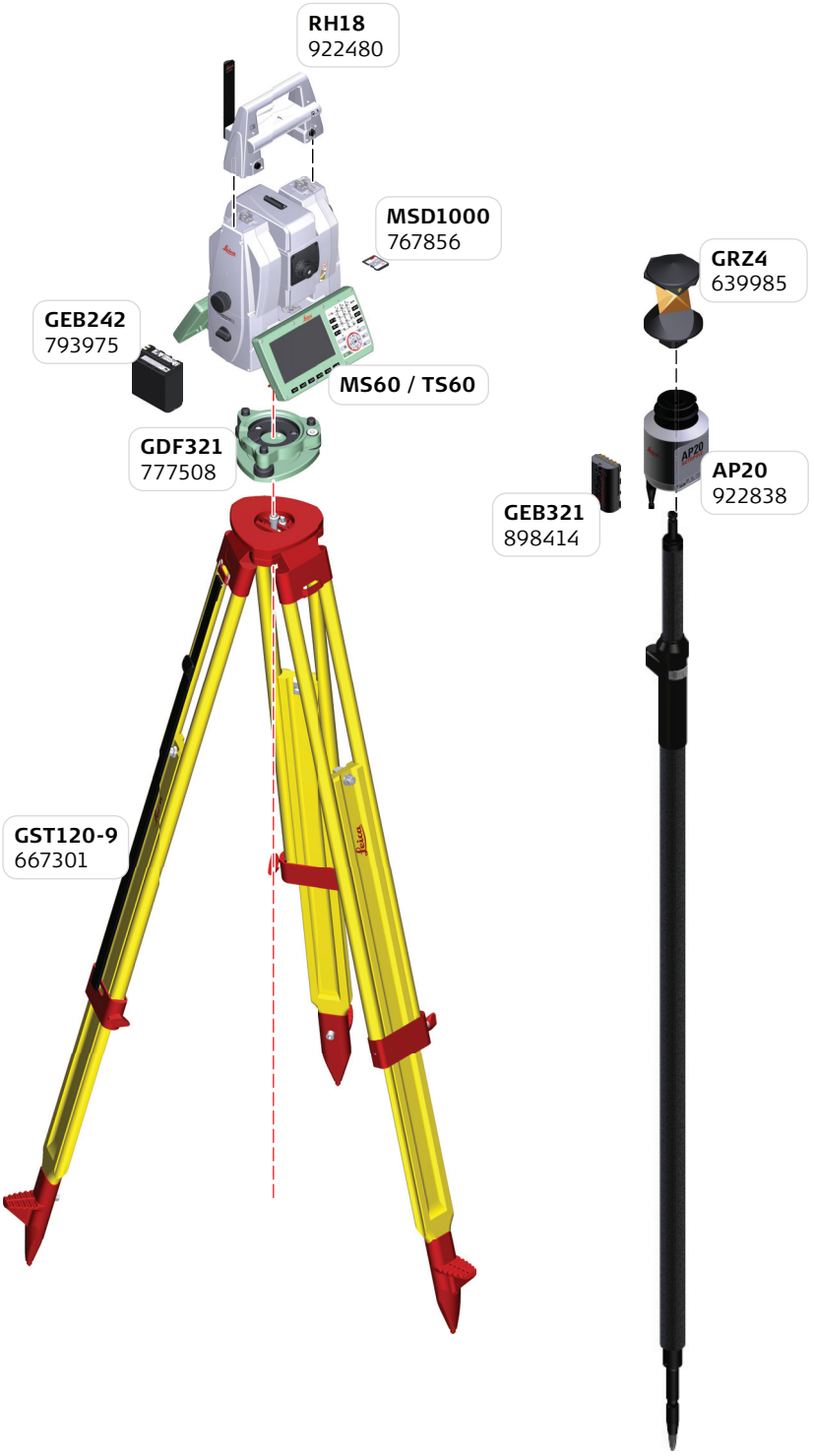

27.3 Robotic Surveying using a TS60 Total Station/MS60 MultiStation and Field Controller

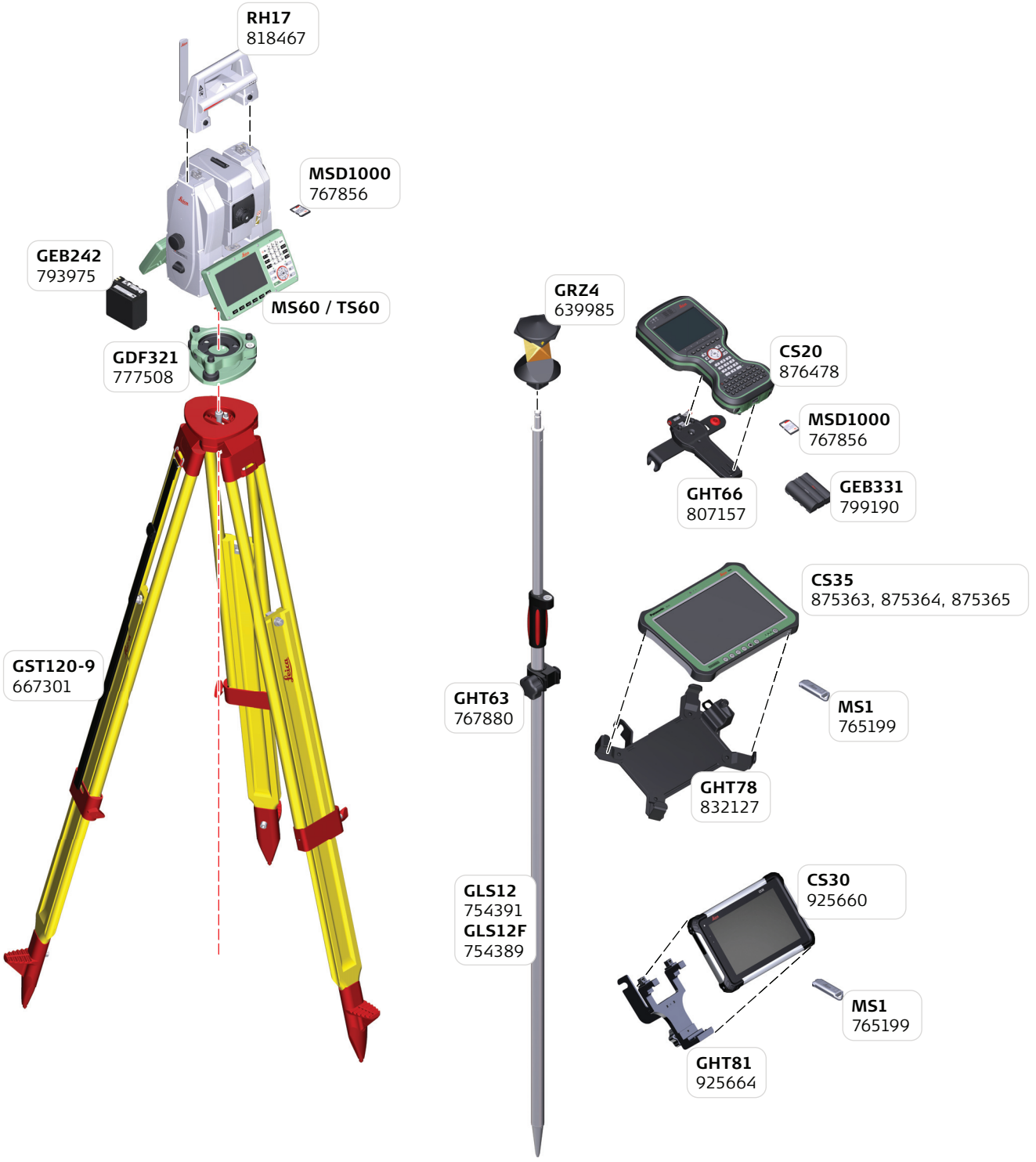

27.4 Robotic Surveying using a TS60 / MS60, AP20 and Field Controller

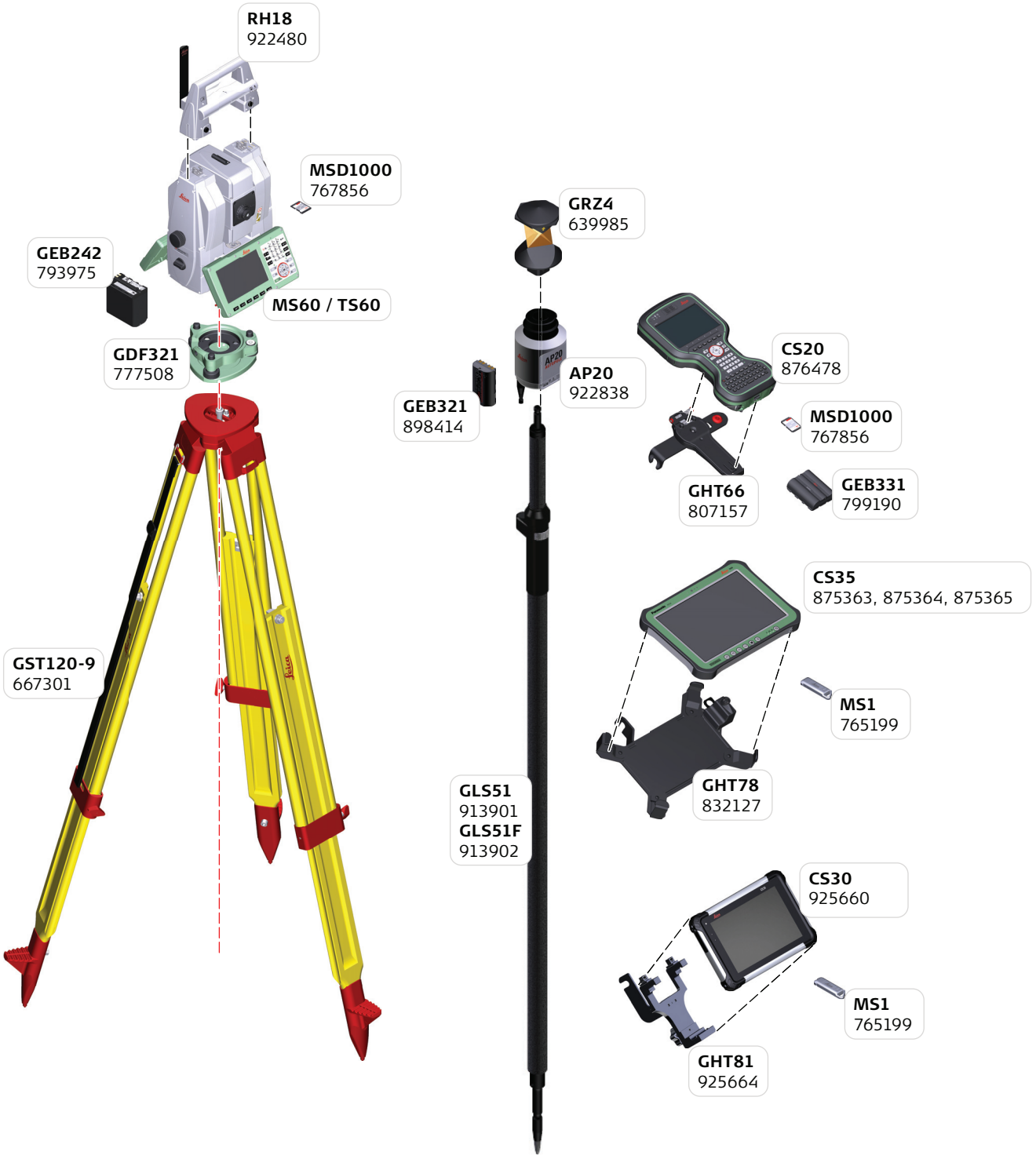

28 SmartPole Surveying

28.1 SmartPole using the GS16 GNSS Receiver and Field Controller

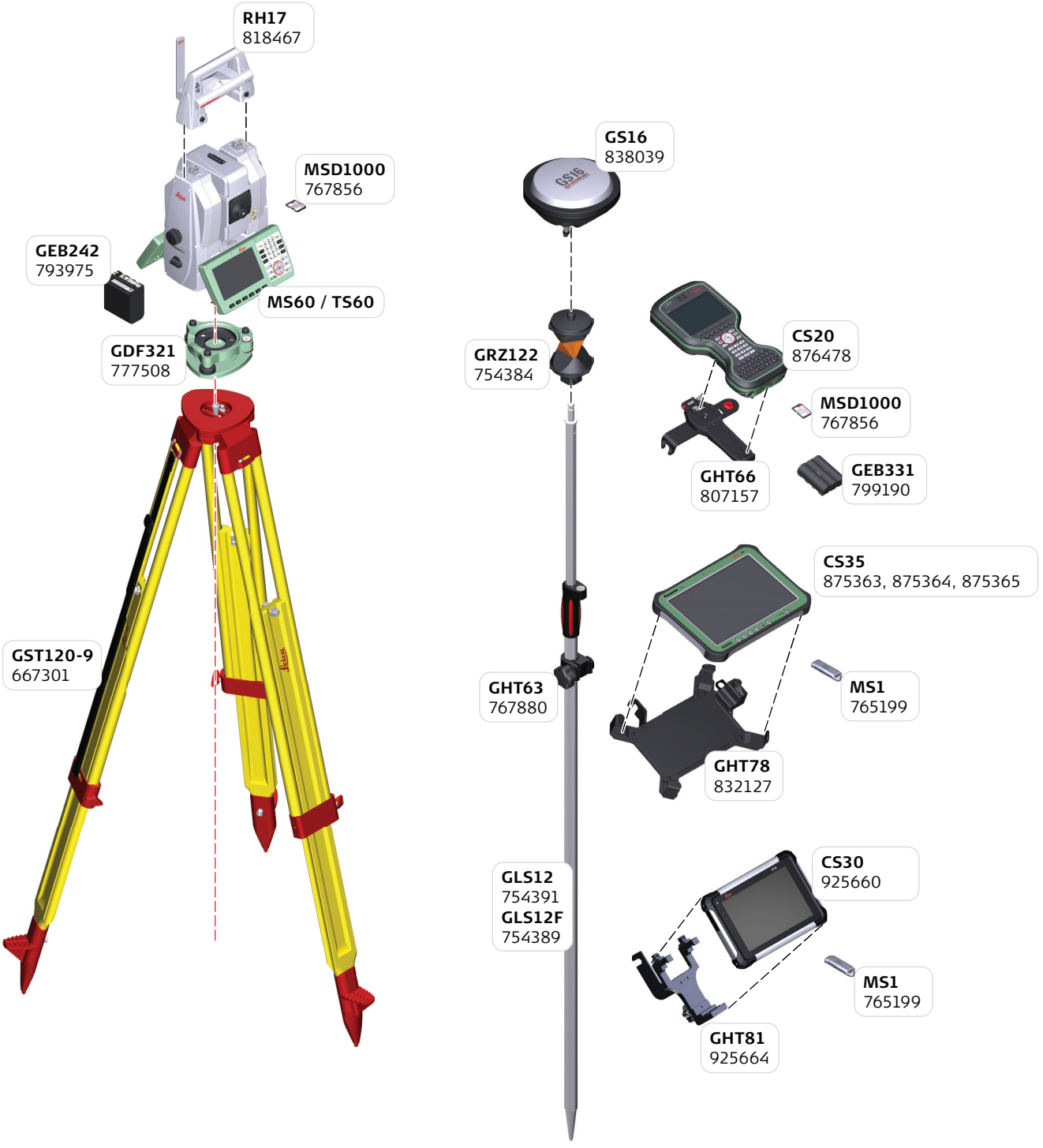

For GNSS anntenna configuration (RTK Antennas and Modems / Radios) and GNSS accessories refer to Leica Captivate GNSS Equipment.

28.2 SmartPole using TS60 / MS60, GS16, AP20 and Field Controller

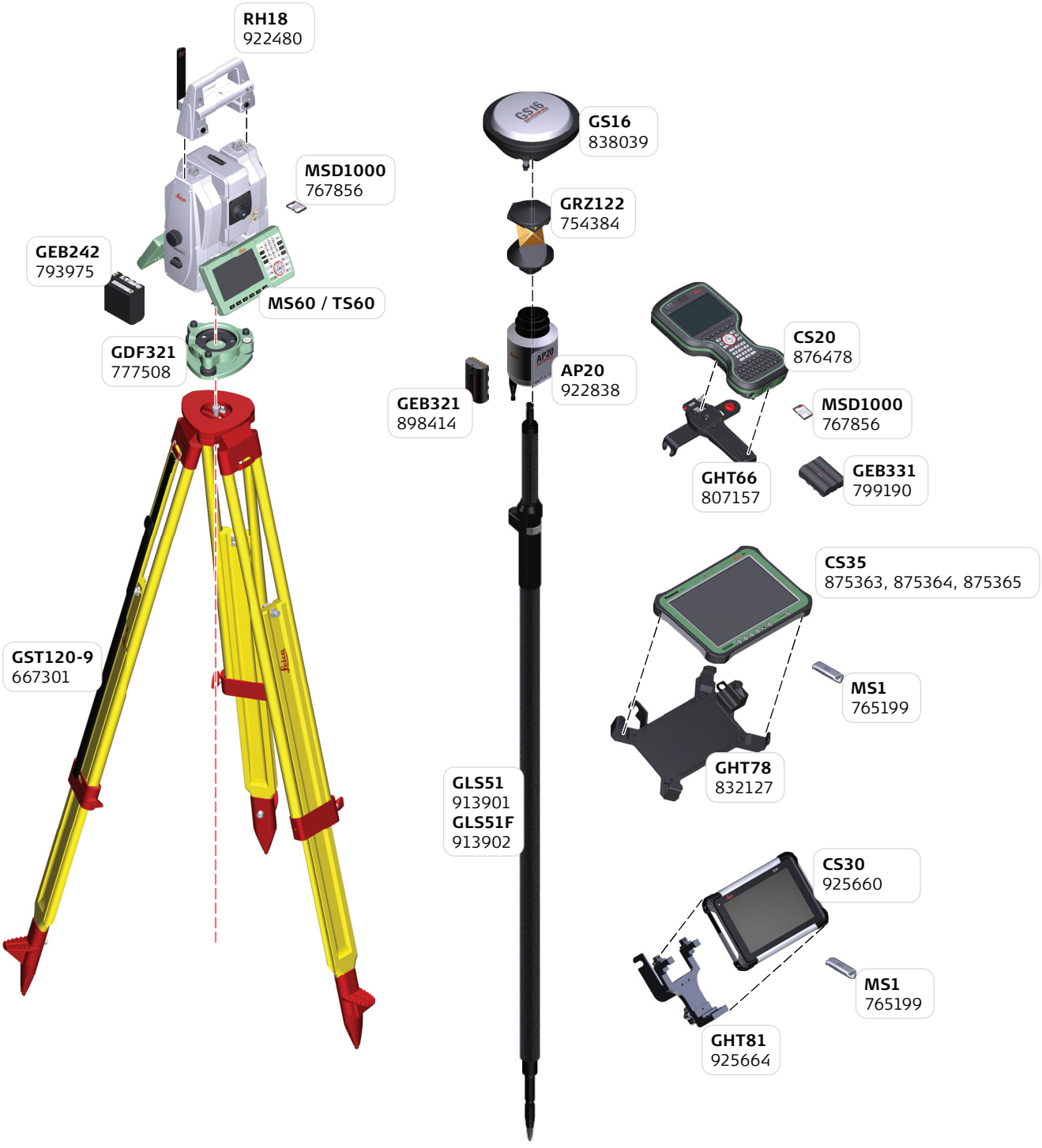

For GNSS anntenna configuration (RTK Antennas and Modems / Radios) and GNSS accessories refer to Leica Captivate GNSS Equipment.

28.3 SmartPole using the GS18 GNSS Receiver and Field Controller

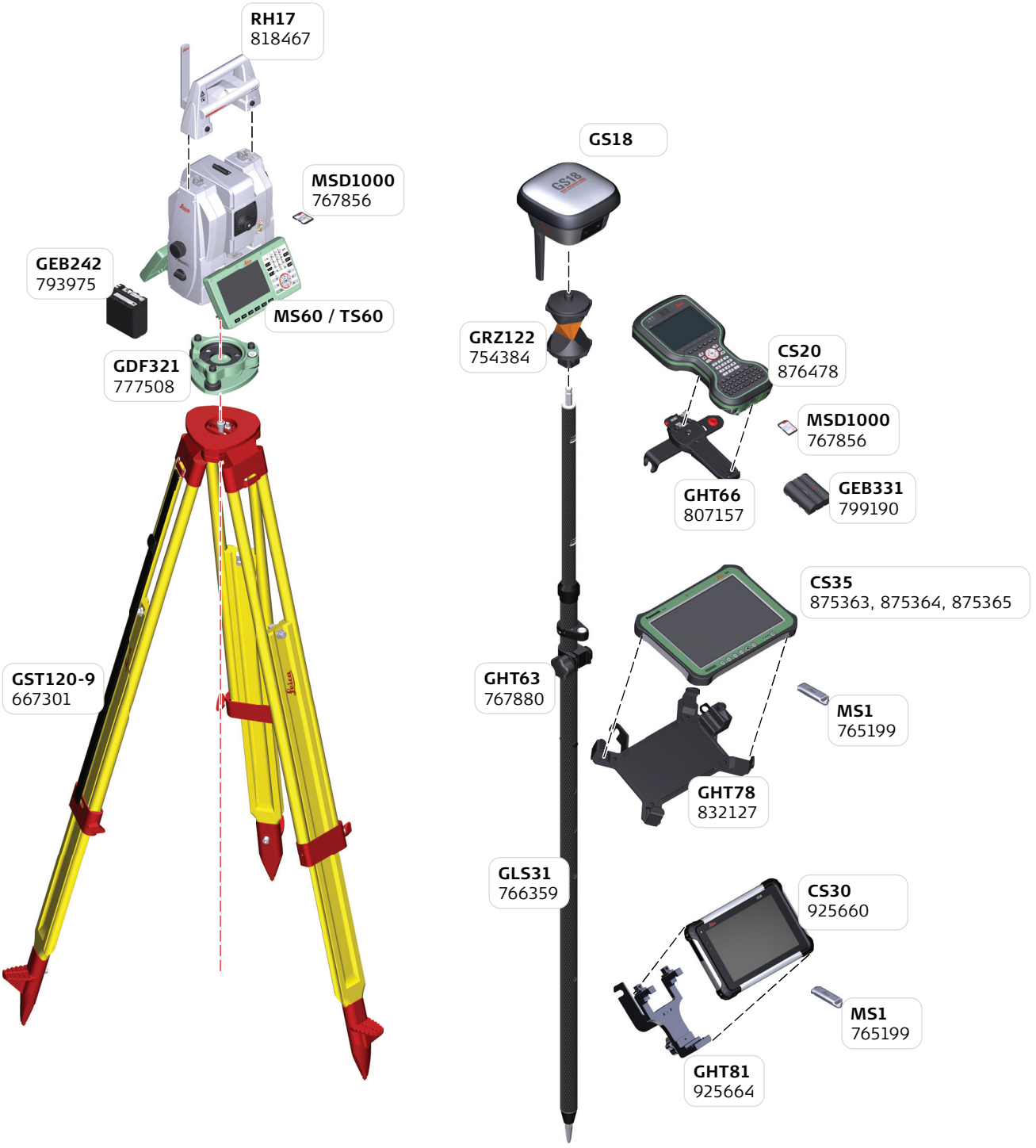

For GNSS anntenna configuration (RTK Antennas and Modems / Radios) and GNSS accessories refer to Leica Captivate GNSS Equipment.

29 SmartStation using the GS16 GNSS Receiver

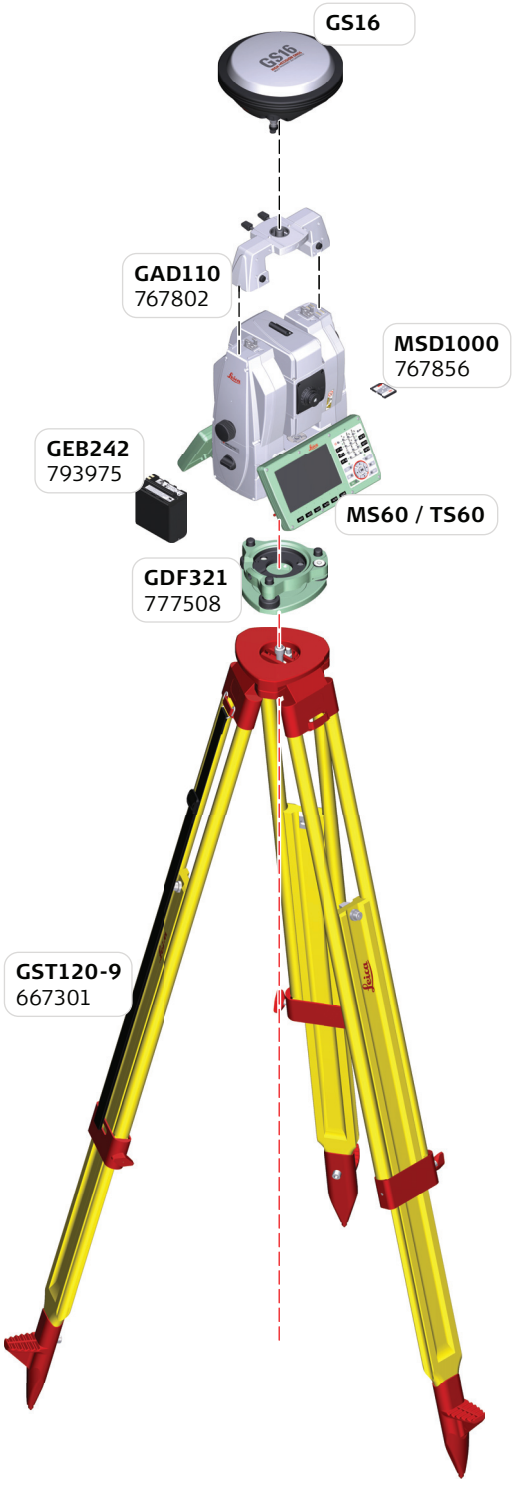

For GNSS anntenna configuration (RTK Antennas and Modems / Radios) and GNSS accessories refer to Leica Captivate GNSS Equipment.

30 Monitoring

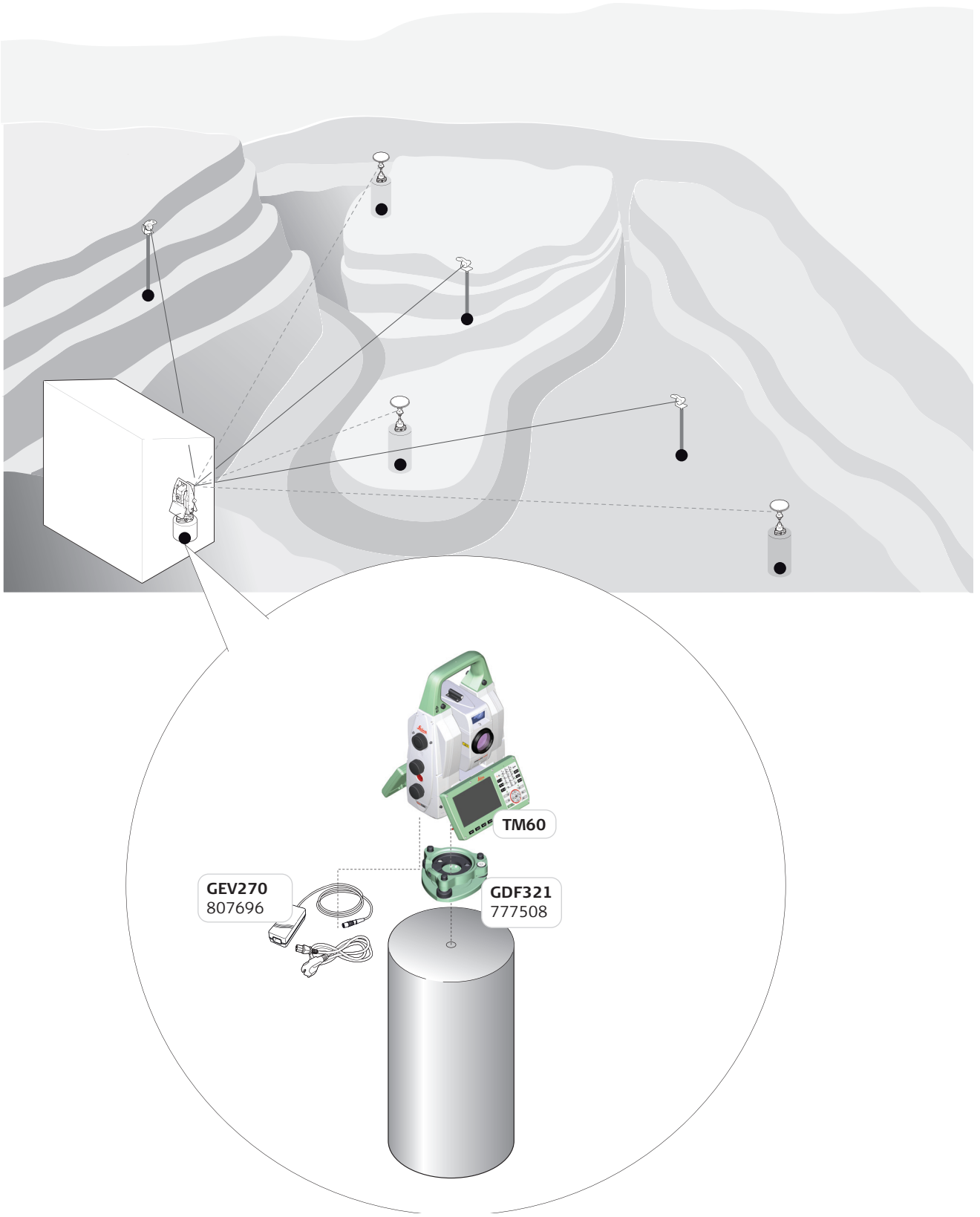

Revolutionising the world of measurement and survey for nearly 200 years, Leica Geosystems creates complete solutions for professionals across the planet. Known for premium products and innovative solution development, professionals in a diverse mix of industries, such as surveying and engineering, safety and security, building and construction, and power and plant, trust Leica Geosystems to capture, analyse and present smart geospatial data. With the highest-quality instruments, sophisticated software and trusted services, Leica Geosystems delivers value every day to those shaping the future of our world.

Leica Geosystems is part of Hexagon (Nasdaq Stockholm: HEXA B; hexagon.com), a leading global provider of information technologies that drive quality and productivity improvements across geospatial and industrial enterprise applications.

Illustrations, descriptions and technical specifications are not binding and may change.
Printed in Switzerland - Copyright Leica Geosystems AG, Heerbrugg, Switzerland, 2021.
837008 - 3.4.0en - VIII.21

Leica Geosystems AG
Heinrich-Wild-Strasse
CH-9435 Heerbrugg
Switzerland
Phone +41 71 727 31 31
www.leica-geosystems.com

- when it has to be **right**